XNB-8000

5M H.265 NW Box Camera

Network

Key Features

- 0.07Lux@F1.2 (Color), 0.007Lux@F1.2 (B/W)
- Max. 30fps@all resolutions (H.265/H.264)
- DIS with built-in Gyro sensor
- Loitering, Directional detection, Fog detection
- Digital auto tracking, Sound classification
- Motion detection, Handover
- Dual SD slots (Max. 512GB)
- WiseStream II support

Compatible Accessories (Optional)

SHB-4301HP

STB-4150V

SHB-4300H1

SHB-4200

SHB-4200H

©2021 Hanwha Techwin Co., Ltd. All rights reserved. 03-2019

Video	
Imaging Device	1/1.8" 6MP CMOS
Resolution	2560x1920, 2560x1440, 1920x1080, 1600x1200, 1280x1024, 1280x960, 1280x720, 1024x768, 800x600, 800x448, 720x576, 720x480, 640x480, 640x360, 320x240
Max. Framerate	H.265/H.264: Max.30fps/25fps(60Hz/50Hz) MJPEG: Max.30fps/25fps(60Hz/50Hz)
Min. Illumination	Color: 0.07Lux(F1.2, 1/30sec) BW: 0.007Lux(F1.2, 1/30sec)
Video Out	CVBS: 1.0 Vp-p / 75Ω composite, 720x480(N), 720x576(P) for installation USB: Micro USB Type B, 1280x720 for installation
Lens	
Focus Control	Simple focus
Lens Type	DC auto iris, P iris
Mount Type	C mount, CS mount
Operational	
Camera Title	Displayed up to 85 characters
Day & Night	Auto(ICR)
Backlight Compensation	BLC, HLC, WDR
Wide Dynamic Range	120dB
Digital Noise Reduction	SSNRV
Digital Image Stabilization	Support(built-in gyro sensor)
Defog	Support(built-in optical filter)
Motion Detection	8ea, 8point polygonal zones
Privacy Masking	32ea, polygonal zones - Color: Grey/Green/Red/Blue/Black/White - Mosaic
Gain Control	Low / Middle / High
White Balance	ATW / AWC / Manual / Indoor / Outdoor
LDC	Support
Electronic Shutter Speed	Minimum / Maximum / Anti flicker (2~1/12,000sec)
Video Rotation	Flip, Mirror, Hallway view(90°/270°)
Analytics	Defocus detection, Directional detection, Fog detection, Face detection, Motion detection, Digital auto tracking, Appear/Disappear, Enter/Exit, Loitering, Tampering, Virtual line, Audio detection, Sound classification
Serial Interface	RS-485(Samsung-T, Pelco-D/P, Panasonic, Bosch, AD, GE, Vicon, Honeywell)
Alarm I/O	Input 1ea / Output 1ea
Alarm Triggers	Analytics, Network disconnect, Alarm input
Alarm Events	File upload via FTP and e-mail Notification via e-mail SD/SDHC/SDXC or NAS recording at event triggers Alarm output
Audio In	Selectable(mic in/line in/built-in mic) Supply voltage: 2.5VDC(4mA), Input impedance: 2K Ohm

©2021 Hanwha Techwin Co., Ltd. All rights reserved. 03-2019

Audio Out	Line out, Max.output level: 1Vrms
Network	
Ethernet	RJ-45(10/100BASE-T)
Video Compression	H.265/H.264: Main/Baseline/High, MJPEG
Audio Compression	G.711 u-law / G.726 Selectable G.726(ADPCM) 8KHz, G.711 8KHz G.726: 16Kbps, 24Kbps, 32Kbps, 40Kbps AAC-LC: 48Kbps at 8/16/32/48KHz
Smart Codec	Manual(5ea area), WiseStream II
Bitrate Control	H.264/H.265: CBR or VBR MJPEG: VBR
Streaming	Unicast(20 users) / Multicast Multiple streaming(Up to 10 profiles)
Protocol	IPv4, IPv6, TCP/IP, UDP/IP, RTP(UDP), RTP(TCP), RTCP, RTSP, NTP, HTTP, HTTPS, SSL/TLS, DHCP, PPPoE, FTP, SMTP, ICMP, IGMP, SNMPv1/v2c/v3(MIB-2), ARP, DNS, DDNS, QoS, UPnP, Bonjour, SRTP (TCP, UDP Unicast)
Security	HTTPS(SSL) Login Authentication Digest Login Authentication IP Address Filtering User access log 802.1X Authentication(EAP-TLS, EAP-LEAP)
Application Programming Interface	ONVIF Profile S/G SUNAPI(HTTP API) Wisenet open platform
General	
Web Viewer	Supported OS : Windows 7, 8.1, 10, Mac OS X 10.10, 10.11, 10.12 Recommended Browser: Google Chrome Supported Browser: MS Explore11, Mozilla Firefox(Window 64bit only), Apple Safari(Mac OS X only)
Edge Storage	Micro SD/SDHC/SDXC 2slot 512GB
Memory	1024MB RAM, 256MB Flash
Environmental & Electrical	
Operating Temperature / Humidity	-10°C ~ +55°C(+14°F ~ +131°F) / Less than 90% RH
Storage Temperature / Humidity	-50°C ~ +60°C(-58°F ~ +140°F) / Less than 90% RH
Input Voltage	PoE(IEEE802.3af, Class3), 24VAC, 12VDC
Power Consumption	PoE: Max 8.50W 12VDC: Max 7.50W 24VAC: Max 8.50W
Mechanical	
Color / Material	Black, Ivory / Plastic
Product Dimensions / Weight	73.1x66.6x147.8mm(2.88x2.62x5.82"), 420g(0.93 lb)

- The lastest product information / specification can be found at hanwha-security.com
- Design and specifications are subject to change without notice.
- Wisenet is the proprietary brand of Hanwha Techwin, formerly known as Samsung Techwin.

©2021 Hanwha Techwin Co., Ltd. All rights reserved. 03-2019

XNB-6000
XNB-8000
UNIT : mm(inch)

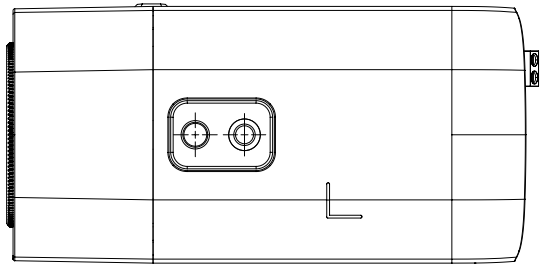

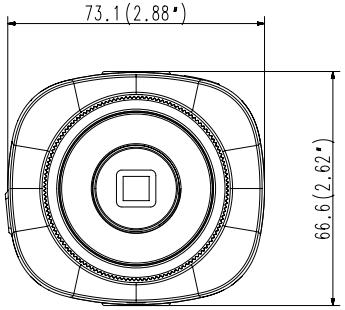

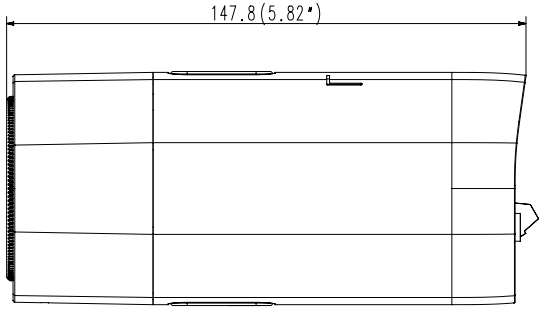

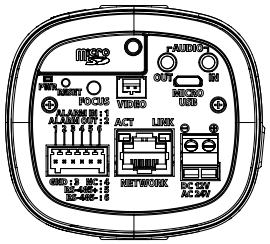

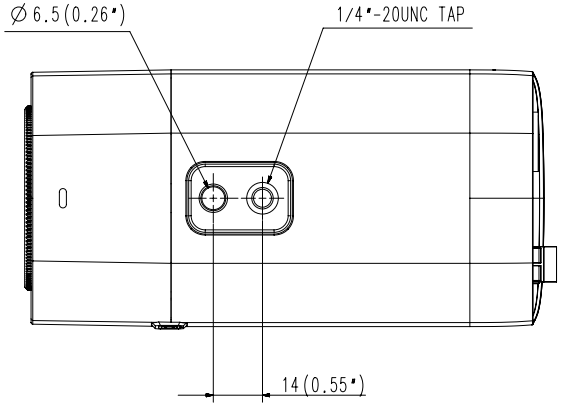

©2021 Hanwha Techwin Co., Ltd. All rights reserved. 03-2019

WISENET