QNB-6002

2MP Box Camera

Network

Key Features

- 0.01Lux@F1.2 (Color)
- Max. 30fps@2MP (H.265/H.264)
- Day & Night (ICR), WDR(120dB)
- Defocus detection, Directional detection, Motion detection, Enter/Exit, Tampering, Virtual line, Tampering
- SD 1slot (128GB)
- H.265, H.264, MJPEG codec, WiseStream II

Compatible Accessories (Optional)

SHB-4301HP

STB-4150V

SHB-4300H1

SHB-4200

SHB-4200H

©2021Hanwha Techwin Co., Ltd. All rights reserved.

Video	
Imaging Device	1/2.8" CMOS
Resolution	1920x1080, 1280x1024, 1280x960, 1280x720, 1024x768, 800x600, 800x448, 720x576, 720x480, 640x480, 640x360, 320x240
Max. Framerate	H.265/H.264: Max. 30fps/25fps(60Hz/50Hz) MJPEG: Max. 15fps/12fps(60Hz/50Hz)
Min. Illumination	Color: 0.01Lux(F1.2, 1/30sec) B/W : 0.001Lux(F1.2, 1/30sec)
Video Out	CVBS: 1.0 Vp-p / 75Ω composite, 720x480(N), 720x576(P) for installation
Lens	
Focus Control	Manual
Lens Type	Manual/ DC-IRIS
Mount Type	C mount, CS mount
Optional Lens	SLA-M2890DN
Operational	
Camera Title	Displayed up to 85 characters
Day & Night	Auto(ICR)
Backlight Compensation	BLC, WDR, SSDR
Wide Dynamic Range	120dB
Digital Noise Reduction	SSNR
Motion Detection	4ea, polygonal zones
Privacy Masking	6ea, rectangular zones
Gain Control	Low/ Middle/ High
White Balance	ATW/ AWC/ Manual/ Indoor/ Outdoor
LDC	Support
Electronic Shutter Speed	Minimum/ Maximum/ Anti flicker (1/5~1/12,000sec)
Video Rotation	Flip, Mirror, Hallway view(90°/270°)
Analytics	Defocus detection, Directional detection, Motion detection, Enter/Exit, Tampering, Virtual line
Serial Interface	RS-485(Samsung-T, Pelco-D/P, Panasonic, Bosch, AD, GE, Vicon, Honeywell)
Alarm I/O	Input 1ea / Output 1ea
Alarm Triggers	Analytics, Network disconnect, Alarm input
Alarm Events	File upload via FTP and e-mail Notification via e-mail SD/SDHC/SDXC or NAS recording at event triggers Alarm output
Audio In	Line-in Supply voltage: 2.5VDC(4mA), Input impedance: 2K Ohm
Audio Out	Line-out 1Vrms
Network	
Ethernet	Metal shielded RJ-45(10/100BASE-T)

©2021 Hanwha Techwin Co., Ltd. All rights reserved.

Video Compression	H.265/H.264: Main/High, MJPEG
Audio Compression	G.711 u-law /G.726 Selectable G.726(ADPCM) 8KHz, G.711 8KHz G.726: 16Kbps, 24Kbps, 32Kbps, 40Kbps
Smart Codec	WiseStream II
Bitrate Control	H.264/H.265: CBR or VBR MJPEG: VBR
Streaming	Unicast(6 users) / Multicast Multiple streaming (Up to 3 profiles)
Protocol	IPv4, IPv6, TCP/IP, UDP/IP, RTP(UDP), RTP(TCP), RTCP, RTSP, NTP, HTTP, HTTPS, SSL/TLS, DHCP, FTP, SMTP, ICMP, IGMP, SNMPv1/v2c/v3(MIB-2), ARP, DNS, DDNS, QoS, UPnP, Bonjour, LLDP
Security	HTTPS(SSL) Login Authentication Digest Login Authentication IP Address Filtering User access log 802.1X Authentication(EAP-TLS, EAP-LEAP) Device Certificate(Hanwha Techwin Root CA)
Application Programming Interface	ONVIF Profile S/G/T SUNAPI(HTTP API) Wisenet open platform
General	
Webpage Language	English, Korean, Chinese, French, Italian, Spanish, German, Japanese, Russian, Swedish, Portuguese, Czech, Polish, Turkish, Dutch
Edge Storage	Micro SD/SDHC/SDXC 1slot 128GB
Memory	1024MB RAM, 256MB Flash
Environmental & Electrical	
Operating Temperature / Humidity	-10°C ~ +55°C (-14°F ~ +131°F) / Less than 90% RH
Storage Temperature / Humidity	-30°C ~ +60°C (-22°F ~ +140°F) / Less than 90% RH
Input Voltage	PoE(IEEE802.3af, Class3), 12VDC
Power Consumption	PoE: Max 6.4W, Typical 4.6W 12VDC: Max 5.8W, Typical 4.1W
Mechanical	
Color / Material	Black, Ivory / Plastic
Product Dimensions / Weight	73.8(W)x66.6(H)X136.2(D)mm(2.9x2.6x5.4"), 320g(0.71 lb)

• The lastest product information / specification can be found at hanwha-security.com
• Design and specifications are subject to change without notice.
• Wisenet is the proprietary brand of Hanwha Techwin, formerly known as Samsung Techwin.

©2021 Hanwha Techwin Co., Ltd. All rights reserved. 01-2020

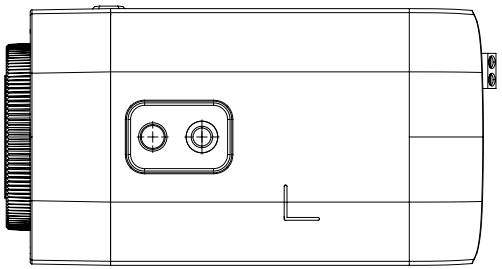

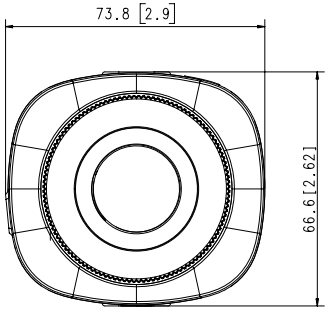

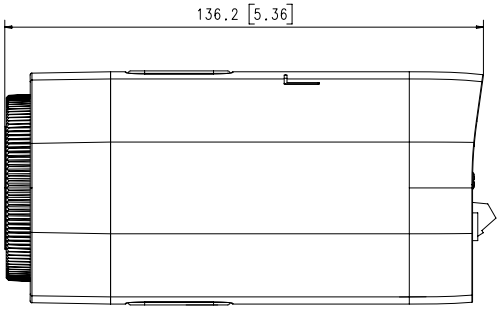

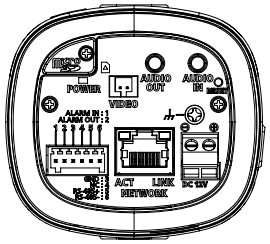

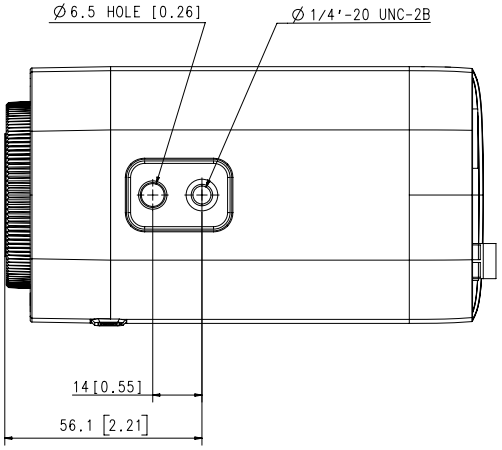

3	-	-
2	QNB-8002	'19.12.23
1	QNB-6002	'19.12.23
No.	MODEL NAME	DATE

Unit:mm[inch] | SCALE:1/1 | Hanwha Techwin

A2

© Hanwha Techwin Co.,Ltd. All rights reserved.

© 2021 Hanwha Techwin Co., Ltd. All rights reserved. 01-2020

WISENET