XNB-6005

2M H.265 NW Box Camera (extraLUX)

Network

Key Features

- 0.006 Lux@F1.2 (Color), 0.0006 Lux@F1.2 (B/W)
- Max. 60fps@all resolutions (H.265 / H.264)
- Day & Night (ICR), WDR (150dB), Defog
- Digital image stabilization with built-in Gyro sensor
- Loitering, Directional detection, Fog detection
- Digital auto tracking, Sound classification, Tampering
- Motion detection, , Audio detection, Handover
- Memory slot (Max. 512GB, Hallway View, WiseStreamII
- PoE / 24V AC, 12V DC, Bi-directional audio Support

Compatible Accessories (Optional)

SHB-4301HP

STB-4150V

SHB-4300H1

SHB-4200

SHB-4200H

©2021 Hanwha Techwin Co., Ltd. All rights reserved. 12-2019

WISENET

Video	
Imaging Device	1/2" 2MP CMOS
Resolution	1920x1080, 1280x1024, 1280x960, 1280x720, 1024x768, 800x600, 800x448, 720x576, 720x480, 640x480, 640x360, 320x240
Max. Framerate	H.265/H.264: Max. 60fps/50fps(60Hz/50Hz) MJPEG: Max. 30fps/25fps(60Hz/50Hz)
Min. Illumination	color: 0.006Lux(F1.2, 1/30sec) BW: 0.0006Lux(F1.2 1/30sec)
Video Out	CVBS: 1.0 Vp-p / 75Ω composite, 720x480(N), 720x576(P) for installation USB: Micro USB Type B, 1280x720 for installation
Lens	
Focus Control	Simple Remote Control focus via network, manual
Lens Type	DC auto iris, P iris
Mount Type	C mount, CS mount
Operational	
Camera Title	Displayed up to 85 characters
Day & Night	Auto(ICR)
Backlight Compensation	BLC, HLC, WDR, SSDR
Wide Dynamic Range	150dB
Digital Noise Reduction	SSNR V
Digital Image Stabilization	Support(built-in gyro sensor)
Defog	Support
Motion Detection	8ea, 8point polygonal zones
Privacy Masking	32ea, polygonal zones - Color: Grey/Green/Red/Blue/Black/White - Mosaic
Gain Control	Low / Middle / High
White Balance	ATW / AWC / Manual / Indoor / Outdoor
LDC	Support
Electronic Shutter Speed	Minimum / Maximum / Anti flicker (2~1/12,000sec)
Video Rotation	Flip, Mirror, Hallway view(90°/270°)
Analytics	Defocus detection, Directional detection, Fog detection, Face detection, Motion detection, Digital auto tracking, Appear/Disappear, Enter/Exit, Loitering, Tampering, Virtual line, Audio detection, Sound classification
Serial Interface	RS-485(Samsung-T, Pelco-D/P, Panasonic, Bosch, AD, GE, Vicon, Honeywell)
Alarm I/O	Input 1ea / Output 1ea
Alarm Triggers	Analytics, Network disconnect, Alarm input
Alarm Events	File upload via FTP and e-mail Notification via e-mail SD/SDHC/SDXC or NAS recording at event triggers Alarm output DPTZ preset

©2021 Hanwha Techwin Co., Ltd. All rights reserved. 12-2019

Audio In	Selectable(mic in/line in/built-in mic) Supply voltage: 2.5VDC(4mA), Input impedance: 2K Ohm
Audio Out	Line out, Max.output level: 1Vrms
Network	
Ethernet	RJ-45(10/100BASE-T)
Video Compression	H.265/H.264: Main/Baseline/High, MJPEG
Audio Compression	G.711 u-law /G.726 Selectable G.726(ADPCM) 8KHz, G.711 8KHz G.726: 16Kbps, 24Kbps, 32Kbps, 40Kbps AAC-LC: 48Kbps at 16KHz
Smart Codec	Manual(5ea area), WiseStream II
Bitrate Control	H.264/H.265: CBR or VBR MJPEG: VBR
Streaming	Unicast(20 users) / Multicast Multiple streaming (Up to 10 profiles)
Protocol	IPv4, IPv6, TCP/IP, UDP/IP, RTP(UDP), RTP(TCP), RTCP,RTSP, NTP, HTTP, HTTPS, SSL/TLS, DHCP, FTP, SMTP, ICMP, IGMP, SNMPv1/v2c/v3(MIB-2), ARP, DNS, DDNS, QoS, PIM-SM, UPnP, Bonjour, LLDP, SRTP(Unicast)
Security	HTTPS(SSL) Login Authentication Digest Login Authentication IP Address Filtering User access log 802.1X Authentication(EAP-TLS, EAP-LEAP)
Application Programming Interface	ONVIF Profile S/G/T SUNAPI(HTTP API) Wisenet open platform
General	
Webpage Language	English, Korean, Chinese, French, Italian, Spanish, German, Japanese, Russian, Swedish,, Portuguese, Czech, Polish, Turkish, Dutch, Hungarian, Greek
Web Viewer	Supported OS: Windows 7, 8.1, 10, Mac OS X 10.10, 10.11, 10.12 Recommended Browser: Google Chrome Supported Browser: MS Explore11, MS Edge, Mozilla Firefox(Window 64bit only), Apple Safari(Mac OS X only)
Edge Storage	Micro SD/SDHC/SDXC 2slot 512GB
Memory	1024MB RAM, 256MB Flash
Environmental & Electrical	
Operating Temperature / Humidity	-10°C~+55°C (-14°F~+131°F) / Less than 90% RH
Storage Temperature / Humidity	-30°C~+60°C (-22°F~+140°F) / Less than 90% RH
Input Voltage	PoE(IEEE802.3af, Class3), 24VAC, 12VDC
Power Consumption	PoE: Max. 8.5W 12VDC: Max. 8W 24VAC: Max. 9W
Mechanical	
Color / Material	Black, Ivory / Plastic
Product Dimensions / Weight	73.1(W)x66.6(H)x147.8(D)mm(2.88x2.62x5.82"), 420g(0.93 lb)

©2021 Hanwha Techwin Co., Ltd. All rights reserved. 12-2019

- The lastest product information / specification can be found at hanwha-security.com
- Design and specifications are subject to change without notice.
- Wisenet is the proprietary brand of Hanwha Techwin, formerly known as Samsung Techwin.

©2021 Hanwha Techwin Co., Ltd. All rights reserved. 12-2019

XNB-6000
XNB-8000
UNIT : mm(inch)

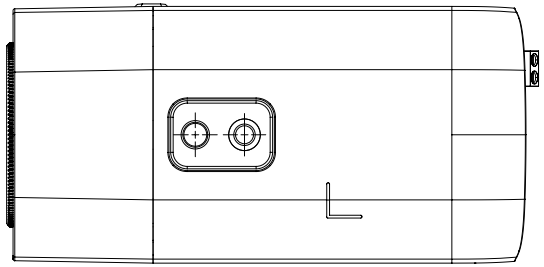

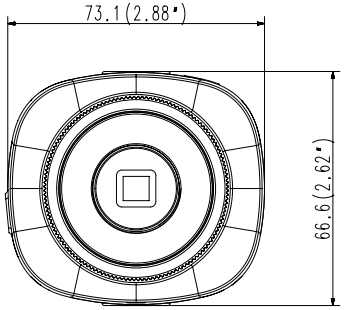

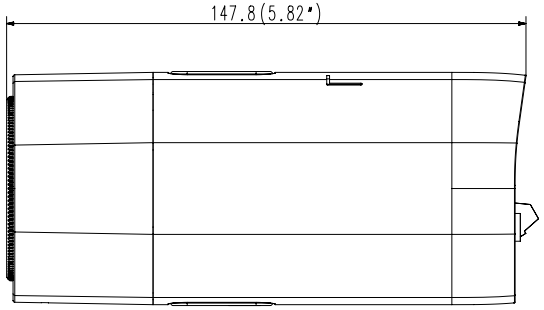

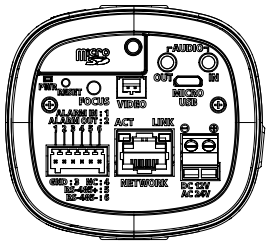

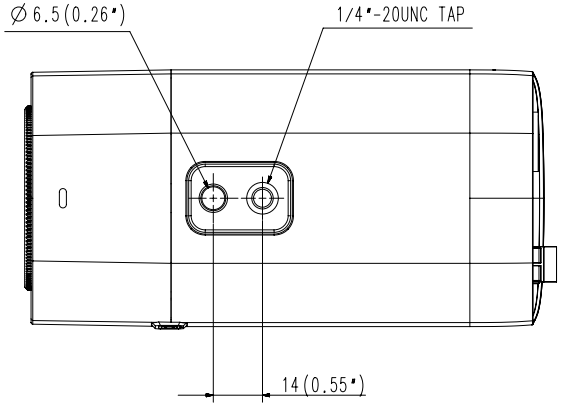

©2021 Hanwha Techwin Co., Ltd. All rights reserved. 12-2019

WISENET